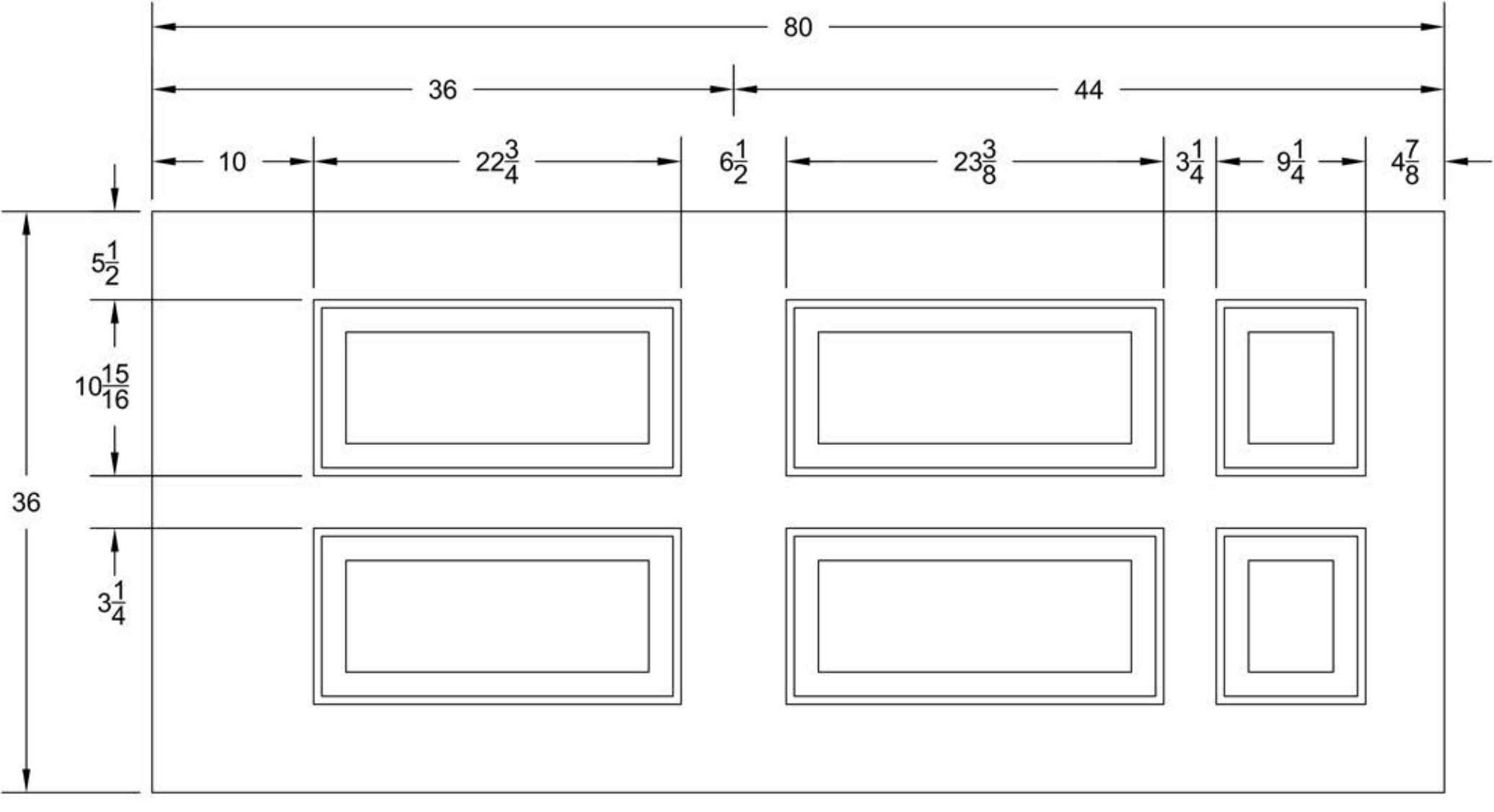
80
36
44
10
22 3/4
6 1/2
23 3/8
3 1/4
9 1/4
4 7/8
5 1/2
10 15/16
36
3 1/4