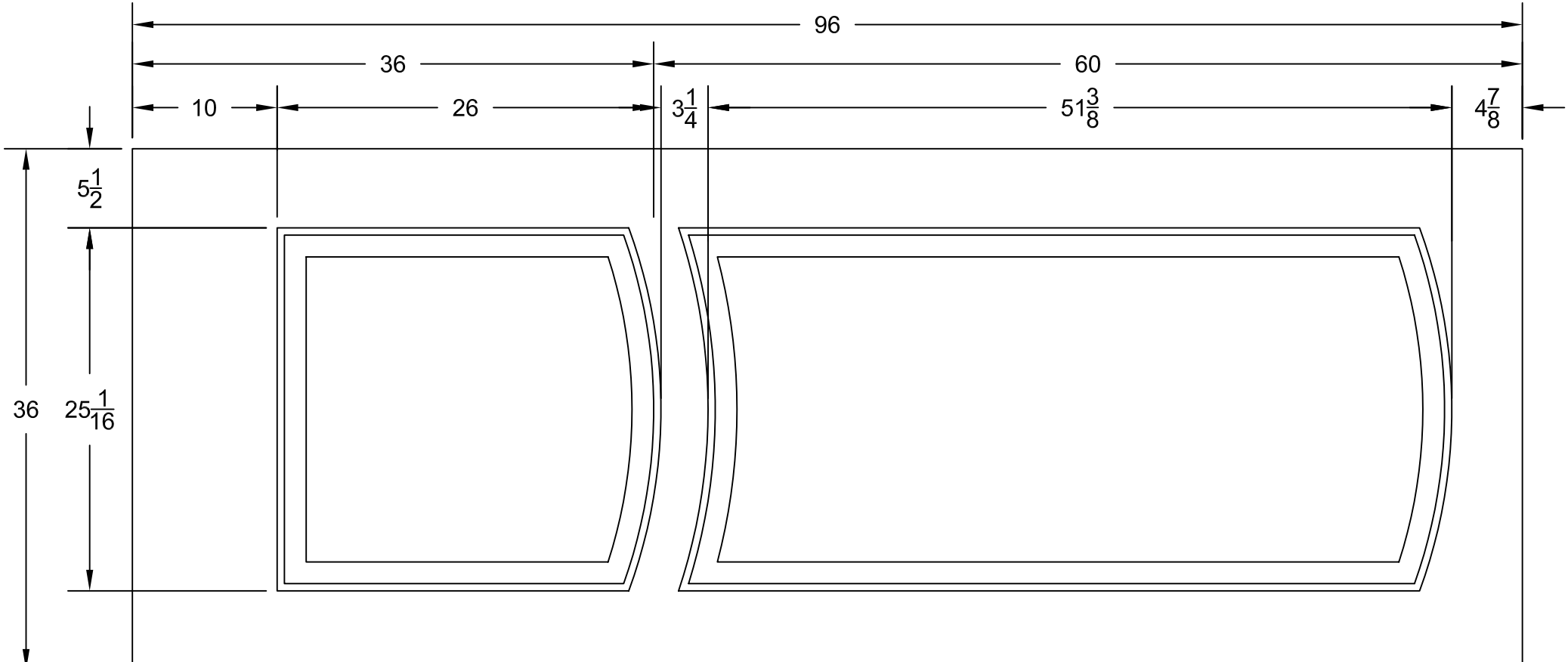
96
36
60
10
26
$3\frac{1}{4}$
$51\frac{3}{8}$
$4\frac{7}{8}$
$5\frac{1}{2}$
36
$25\frac{1}{16}$