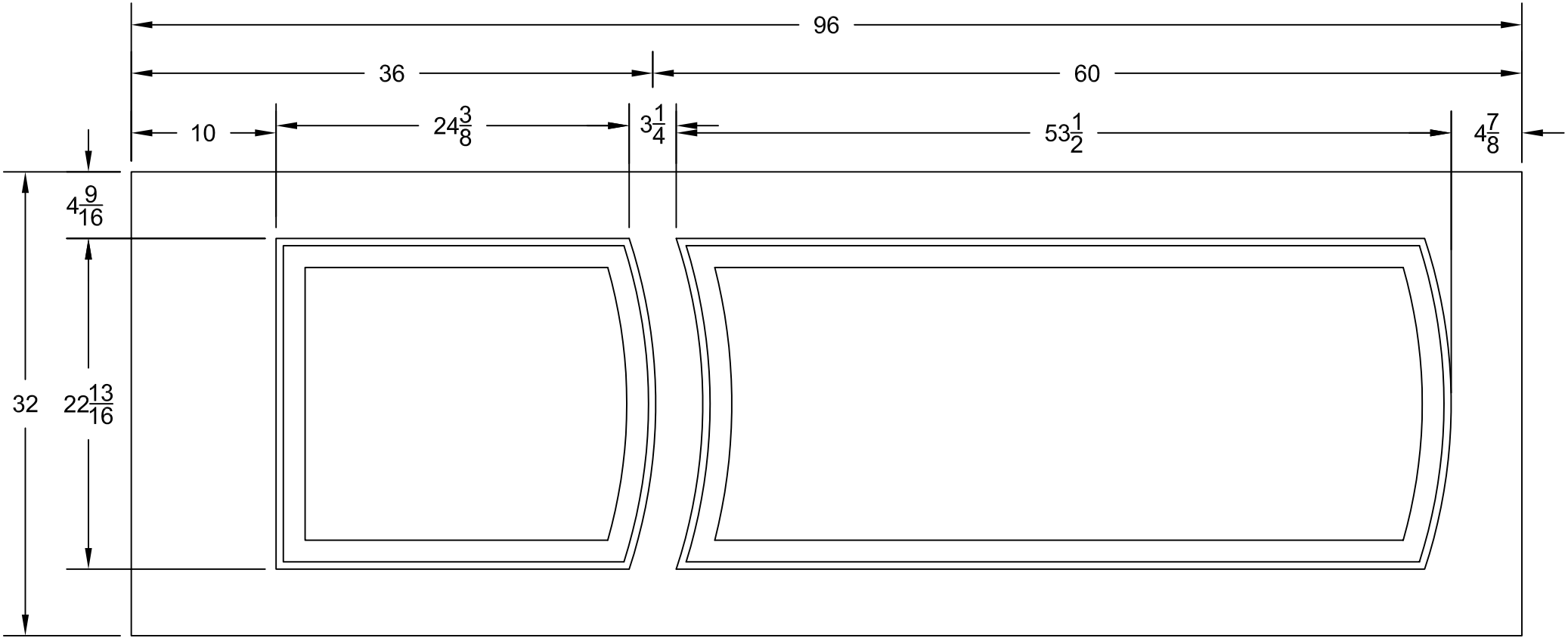
96
36
60
10
$24\frac{3}{8}$
$3\frac{1}{4}$
$53\frac{1}{2}$
$4\frac{7}{8}$
$4\frac{9}{16}$
32
$22\frac{13}{16}$