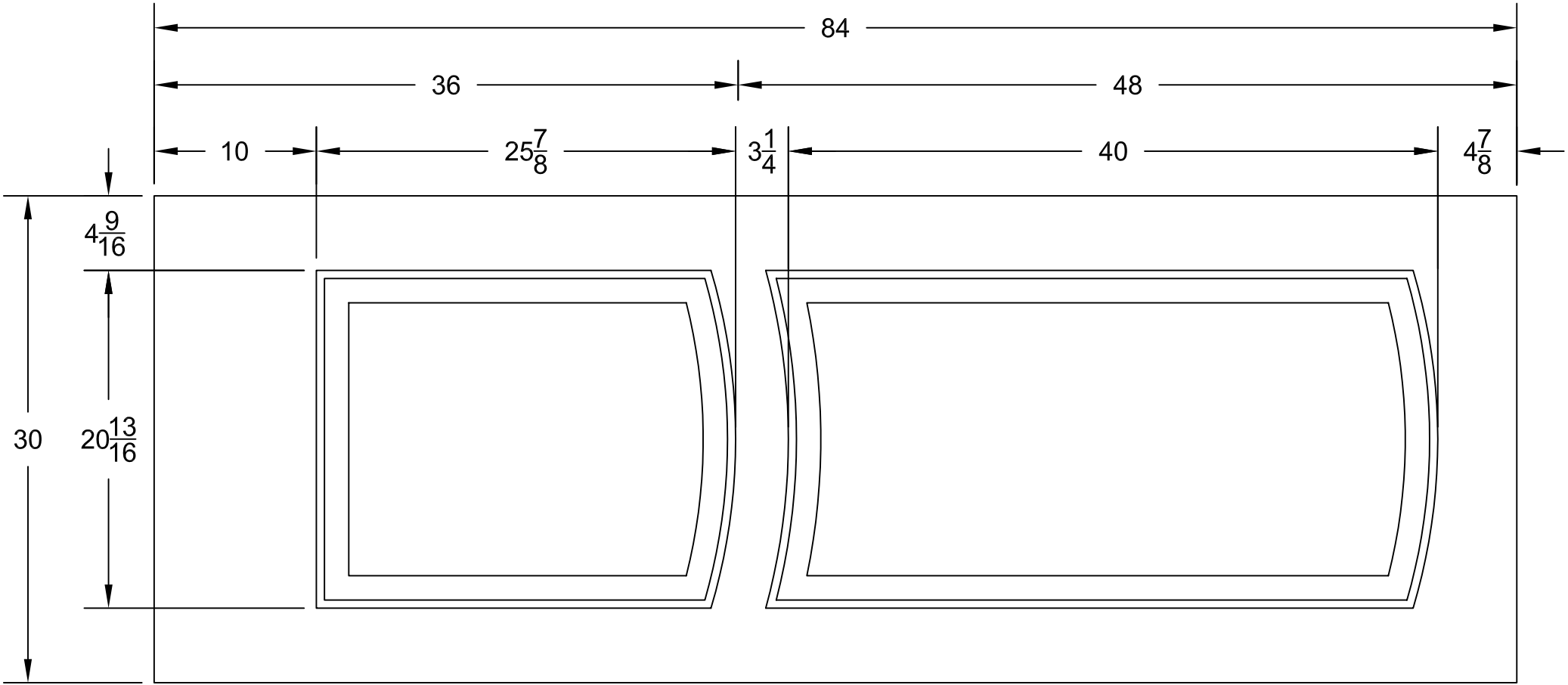
84
36
48
10
$25\frac{7}{8}$
$3\frac{1}{4}$
40
$4\frac{7}{8}$
$4\frac{9}{16}$
30
$20\frac{13}{16}$