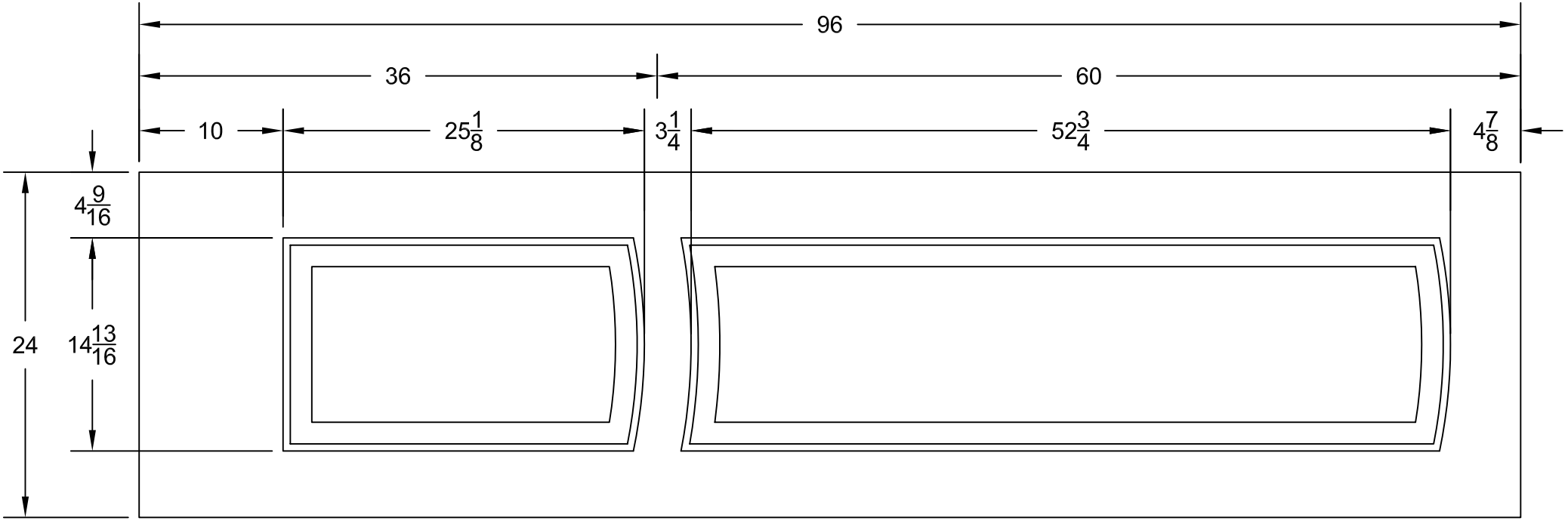
96
36
60
10
$25\frac{1}{8}$
$3\frac{1}{4}$
$52\frac{3}{4}$
$4\frac{7}{8}$
$4\frac{9}{16}$
24
$14\frac{13}{16}$