Quote #

ID #

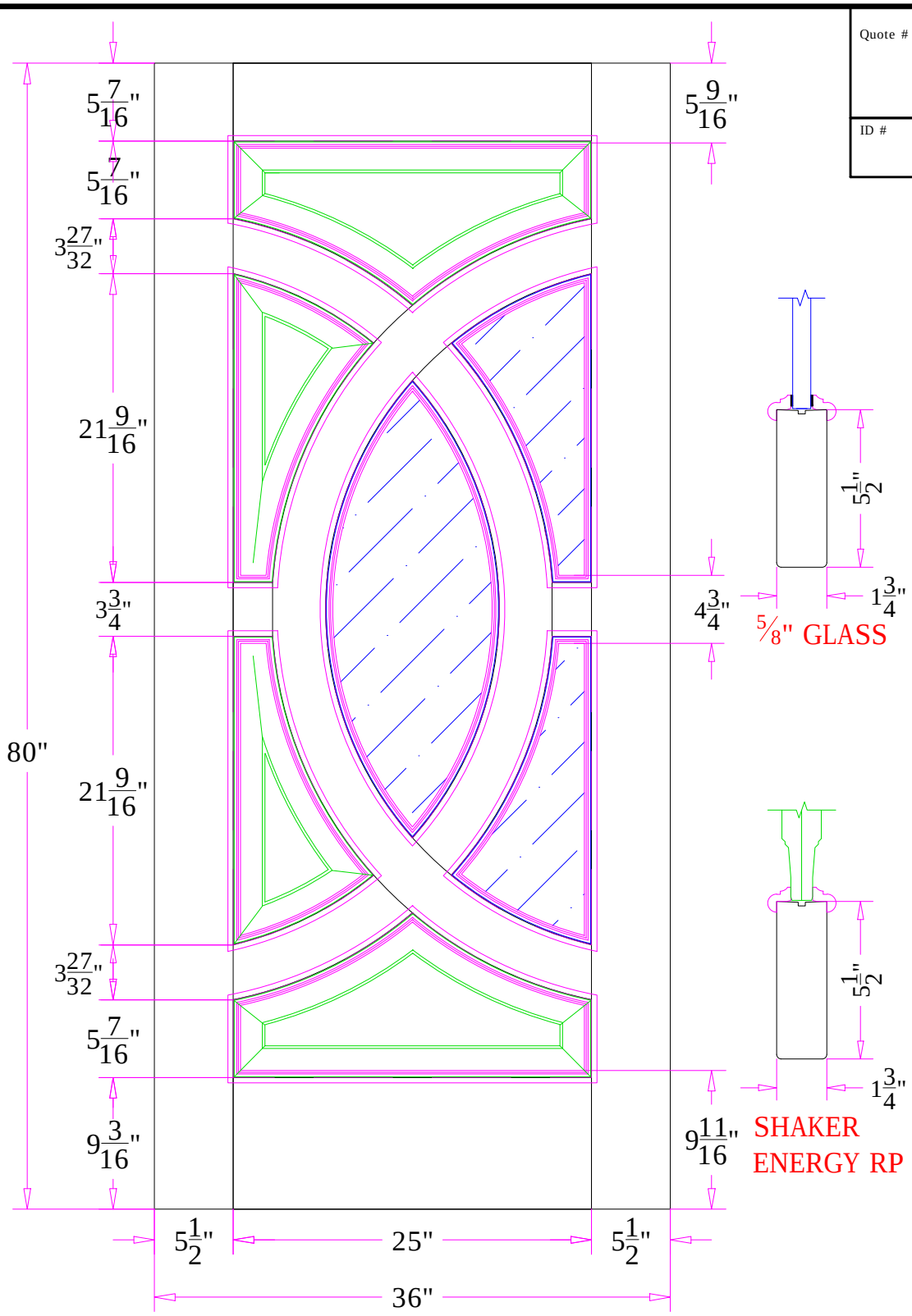

THIS DRAWING AND THE INFORMATION CONTAINED HEREIN IS THE PROPRIETARY TO SIMPSON DOOR COMPANY AND SHALL NOT BE REPRODUCED, COPIED OR DISCLOSED IN WHOLE OR PART, OR USED FOR MANUFACTURE OR FOR ANY OTHER PURPOSE WITHOUT THE WRITTEN PERMISSION OF SIMPSON DOOR COMPANY.

Revisions

Rev. #	Description	Date	by Whom

TITLE: Customer Layout

DRAWING NO.

LAYOUT | SCALE: NTS | BORE PATTERN #

DRAWN BY: V.KEECH | DATE: Date

Simpson®

7/26/2016 9:11:03 AM